TECE data sheet

Status as of 31.07.2019



TECEdrainline drain "vertical", DN 50

Article number: 650003

DU 1: 1 pc.
DU 2: 175 pc.

Description:

Vertical drain for the TECEdrainline shower channel to fit to the channel body, drain can be rotated 360°, for vertical connection to DN 50 drain pipe, with removable siphon immersion pipe

- Minimum installation height from upper edge of channel to lower edge of stirrup = 67 mm
- Sealing water height = 50 mm, to DIN EN 1253
- Core hole required = 130 mm

Drainage capacity to DIN EN 1253, with 10/20 mm build-up above grate:
- Design grate "basic": 1.3/1.3 l/s
- Design grate "steel II": 1.3/1.3 l/s
- Tileable channel "plate"/"plate II": 1.2/1.2 l/s

Sales data:

TECEdrainline drain "vertical" DN 50 side drain, drainage capacity, 1.3 l/s

Dimensional drawings:

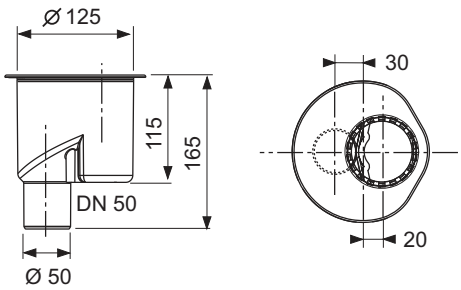

TECE GmbH · Hollefeldstraße 57 · 48282 Emsdetten
Phone: 02572/928-999 · international-business@tece.de · www.tece.com

Spare parts:

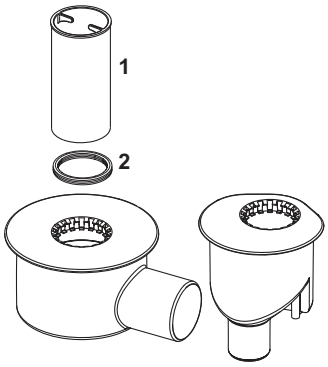

1	668019	Immersion pipe (H = 94 mm) for outlet max and vertical
2	668032	Seal between channel and drain with grip claw, from 2015

TECE GmbH · Hollefeldstraße 57 · 48282 Emsdetten
Phone: 02572/928-999 · international-business@tece.de · www.tece.com