TECE data sheet

Status as of 29.12.2025

9242040

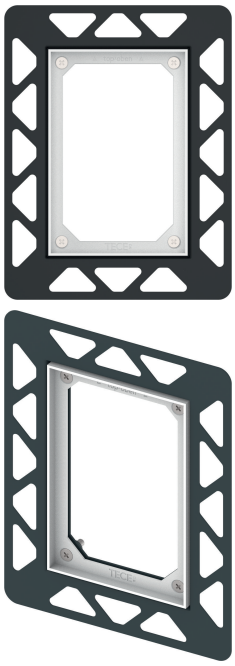

TECEfilo installation frame for flush-mounted installation

Article number: 9242040

Colour: Bright chrome
DU 1: 1 pc.

Description:

Installation set for flush-mounted assembly of TECEfilo glass, TECEfilo plastic and TECEfilo-Velvet urinal electronics in a dry-wall. Depth-adjustable tile frame for wall coverings from 5-18 mm (from 18-33 mm with adjustment bolt - Item No. 9820181). Including disassembly tool for cover panel.

Required for shell installation.

Caution:
For dry-wall installation only. To obtain a clean edge, please use a water jet cutter to prepare the tile cut-out.

Sales data:

Product name:	TECEfilo installation frame for flush-mounted installation, Bright chrome
Commodity group:	904
Product group:	2009040130

TECE SE · Hollefeldstraße 57 · 48282 Emsdetten
Phone: 02572/928-999 · international-business@tece.de · www.tece.com

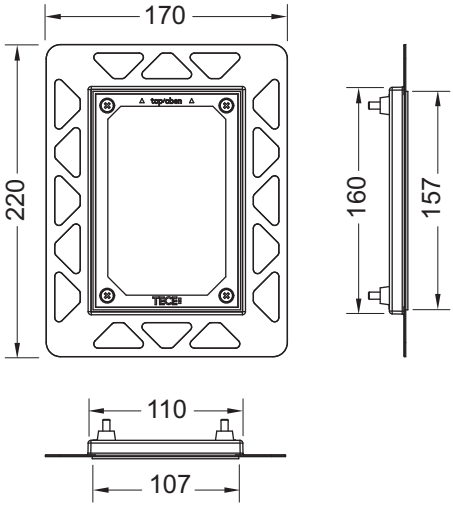
170
220
160
157
110
107