TECE data sheet

Status as of 16.07.2021

9300309

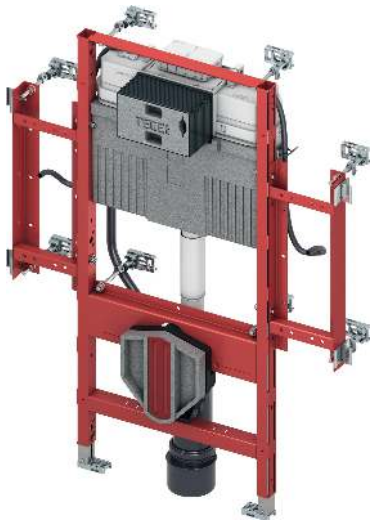

TECEprofil WC Geronto module with Uni cistern, ceramic attachment for sitting height of 48 cm in keeping with German standard DIN 18040-1, installation height 1120 mm

Article number: 9300309

Description:

Toilet module including “easy fit” flush plate installation and conduit to connect electronic shower toilets. For attachment to TECEprofil section tubes or for flush-mounted profile walls or in front of a solid wall. For barrier-free construction with raised ceramic attachment. Module with lateral steel frames and conduits for cable laying, including mounting materials.
Safety support arm height = 760 mm

Uni cistern for front actuation:
- Safety tank made of impact-resistant plastic, tested to EN 14055
- Cistern fully pre-assembled and sealed.
- Cistern connection with outer thread R 1/2" at the side, compatible with quick adapters
- 10 litre tank volume; 6 litre pre-set standard flush volume, 4.5/7.5/9-litre flush volume can be set at any time; 3-litre partial flush volume for dual-flush system; remaining volume can be used for immediate cleaning flush.
- Insulated against condensation water
- For TECE flush plates and toilet electronics
- Can be used as a single or dual-flush cistern
- “easy fit” flush plate installation
- Installation tunnel for service opening, can be shortened without tools
- Low-noise hydraulic filling valve, fitting group 1 according to DIN 4109

Module frame:
- Self-supporting, powder-coated
- Two adjustable floor supports for floor projections of 0-200 mm.
- Two M 12 retaining bolts and nuts
- Eight depth-adjustable module attachments
- Four multi-clips for attachment to a TECEprofil wall
- Lateral steel frames to hold the steel plate sets.
- Toilet drain bend DN 90 with joint adapter DN 90/100, made of PP
- Joint adapter also suitable for horizontal installation
- Toilet connection set DN 90

TECE GmbH · Hollefeldstraße 57 · 48282 Emsdetten
Phone: 02572/928-999 · international-business@tece.de · www.tece.com

TECE data sheet

9300309

Status as of 16.07.2021

Sales data:

Product name:	TECEprofil WC Geronto module with Uni cistern, ceramic attachment for sitting height of 48 cm, to DIN 18040-1, installation height 1120 mm
Commodity group:	905
Product group:	2009050010

Dimensional drawings:

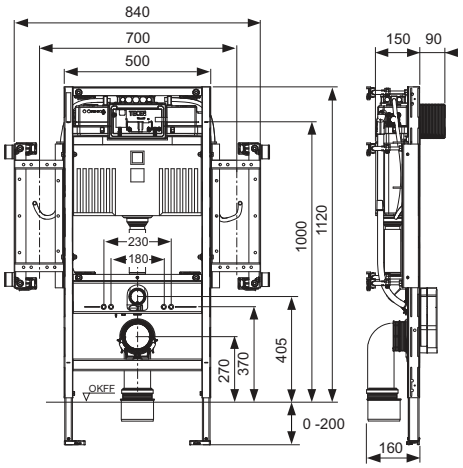

Spare parts:

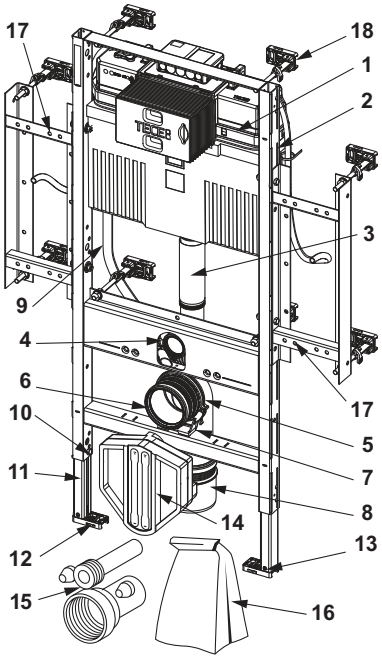

	9820103	Uni cistern 1120 mm
1	9820103	Uni cistern 1120 mm
2	9820040	Assembly kit for Uni cistern
3	9820011	Flush pipe with O-ring, length 269 mm, dry-wall construction
4	9820015	Flush pipe seal
5	9820134	Toilet drain bend DN 90 (PP)
6	9820139	Seal for toilet drain bend/adapter
7	9820348	Toilet drain bend holder complete, underneath (from 04/2017)
8	9820136	Adapter DN 90/DN 100 (PP)
9	9820569	Attachment clips and conduit
10	9820447	Foot brake with steel spring
11	9820335	C-section for module foot
12	9820332	Module foot with toggle left
13	9820333	Module foot with toggle right
14	9820568	Bare-wall protection for shower toilet connection
15	9820057	Connection set DN 90 for toilet
16	9820043	By-pack for toilet module (mounting material, etc.)
17	9820437	Support frame set
18	9380014	Wall attachment with quick closure

TECE GmbH · Hollefeldstraße 57 · 48282 Emsdetten
Phone: 02572/928-999 · international-business@tece.de · www.tece.com